27" Full HD IPS monitor with edge-to-edge design, perfect for multi-monitor setups

Stylish edge-to-edge design makes the ProLite XU2793HS perfect for multi-monitor set-ups. The IPS panel technology offers accurate and consistent colour reproduction with wide viewing angles. High contrast and brightness values mean the monitor will provide excellent performance for photographic and web design. Equipped with speakers, headphone socket, HDMI and DisplayPort connections, a blue light reducer function to reduce eye fatigue make this 27'' monitor a great choice for both multi-monitor configuration and office applications.

Available also with height adjustable stand : ProLite XUB2793HS-B7 (1920x1080) and ProLite XUB2793QS-B7 (2560x1440)

IPS Technology

IPS displays are best known for wide viewing angles and natural, highly accurate colours. They are especially suited for colour-critical applications.

Blue light reducer

As we all know looking at a monitor screen for several hours per day, especially form a closer distance, causes eye fatigue. This effect is much stronger with computer screens than with TV equipment. One of the factors responsible for this phenomenon is the blue light emitted by the screen. Therefore reducing the amount of blue light ultimately allows our eyes to feel less tired while working long hours with a computer screen. We achieved it by adjusting the monitor's brightness and color temperature through a new feature called "Blue light reduction" easily accessible through the monitor's OSD menu.

01 DISPLAY CHARACTERISTICS

Design	3-side borderless
Diagonal	27", 68.6cm
Panel	IPS panel technology LED, matte finish
Native resolution	1920 x 1080 @100Hz (2.1 megapixel Full HD)
Aspect ratio	16:9
Panel brightness	300 cd/m²
Static contrast	1300:1
Advanced contrast	80M:1
Response time (MPRT)	1ms
Viewing zone	horizontal/vertical: 178°/178°, right/left: 89°/89°, up/down: 89°/89°
Colour support	16.7mln (sRGB: 96%; NTSC: 72%)
Horizontal Sync	30 - 110kHz
Viewable area W x H	597.9 x 336.3mm, 23.5 x 13.2"
Pixel pitch	0.311mm
Colour	matte, black

02 INTERFACES / CONNECTORS / CONTROLS

Signal input	HDMI x1 (v.1.4) DisplayPort x1 (v.1.2.)
HDCP	yes
Headphone connector	yes

03 FEATURES

Blue light reducer	yes
Flicker free	yes
Adaptive Sync support	yes
Extra	i-style Colour
OSD languages	EN, DE, FR, ES, IT, RU, JP, CZ, NL, PL
Control buttons	Power, Menu, Adjustment/Volume, Adjustment/i-Style Colour, Input/Exit
User controls	picture adjust (brightness, contrast, Eco, ACR, OD, MBR, Adaptive Sync), colour settings (i-Style colour, blue light reducer, colour temp., user preset), OSD (H. position, V. position, OSD time), language, recall, miscellaneous (sharp and soft, video mode adjust, opening logo, RGB range, LED, display information), input select (source), audio settings (volume, mute)
Speakers	2 x 2W
Convenience	Kensington-lock™ prepared, DDC/CI, DDC2B, Mac OSX

04 MECHANICAL

Display position adjustments	tilt
Tilt angle	22° up; 4° down
VESA mounting	100 x 100mm
Cable management system	yes

05 ACCESSORIES INCLUDED

Cables	power, HDMI

Other	quick start guide, safety guide

06 POWER MANAGEMENT

Power supply unit	internal
Power supply	AC 100 - 240V, 50/60Hz
Power usage	22W typical, 0.5W stand by, 0.3W off mode

07 SUSTAINABILITY

Regulations	TCO Certified, CE, TÜV-Bauart, EAC, VCCI-B, PSE, RoHS support, ErP, WEEE, REACH, UKCA
Energy efficiency class (Regulation (EU) 2017/1369)	E
REACH SVHC	above 0.1%: Lead

08 DIMENSIONS / WEIGHT

Product dimensions W x H x D	611.5 x 435 x 189mm
Box dimensions W x H x D	688 x 465 x 125mm
Weight (without box)	3.8kg
Weight (with box)	5.3kg
EAN code	4948570124626

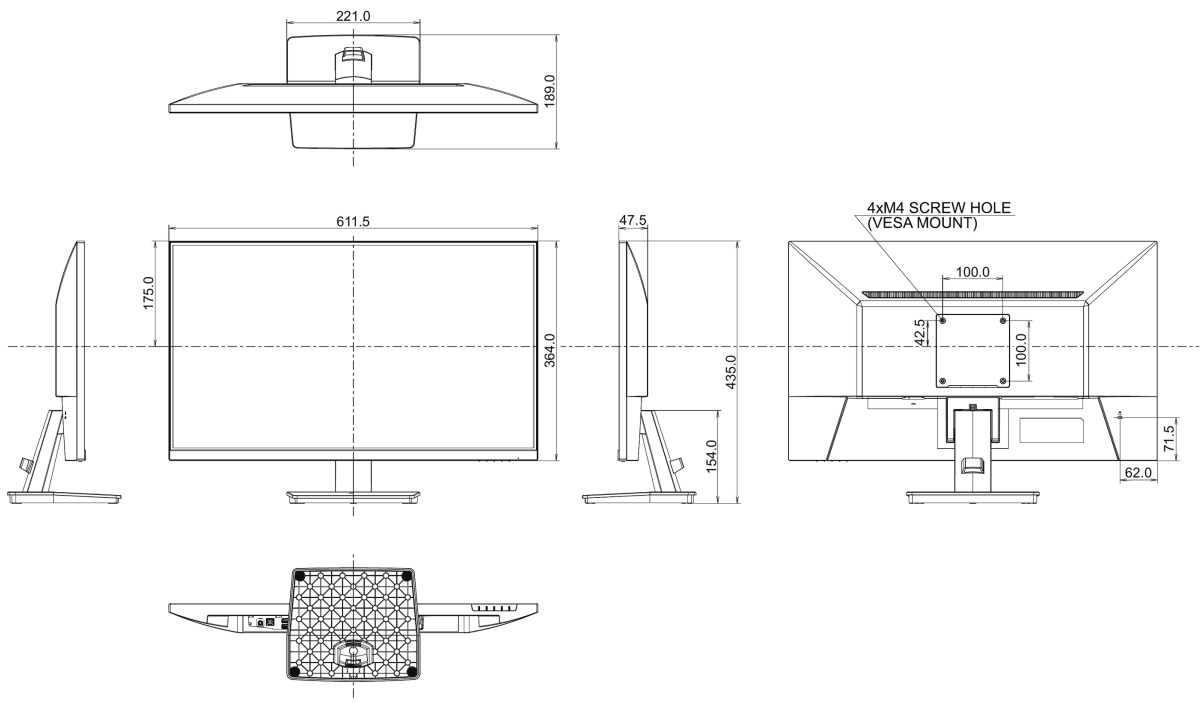

All trademarks and registered trademarks acknowledged. E & O E. Specification subject to change without notice. All LCD's comply with ISO-9241-307:2008 in connection with pixel defects.

© IIYAMA CORPORATION. ALL RIGHTS RESERVED